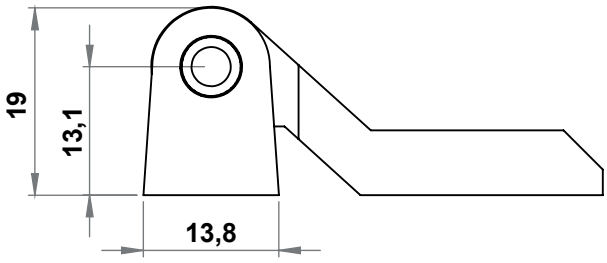

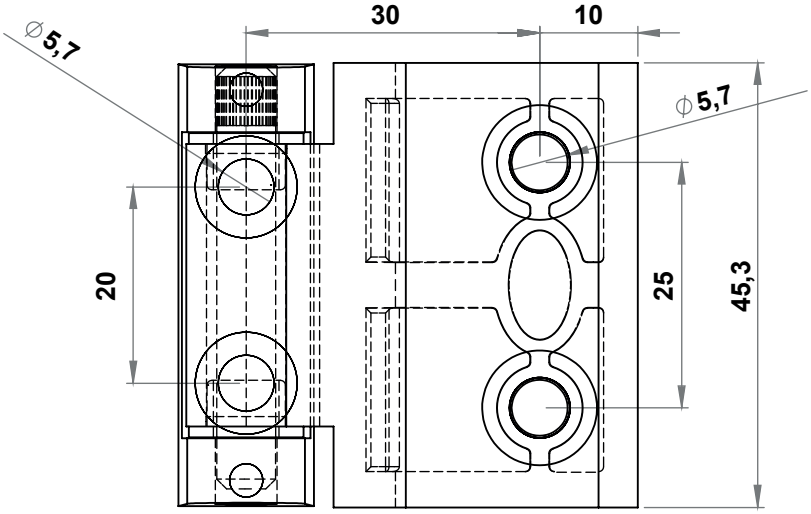

MATERIAL

Housing: Zinc die, chrome plated or black coated
Pin : Steel, zinc plated

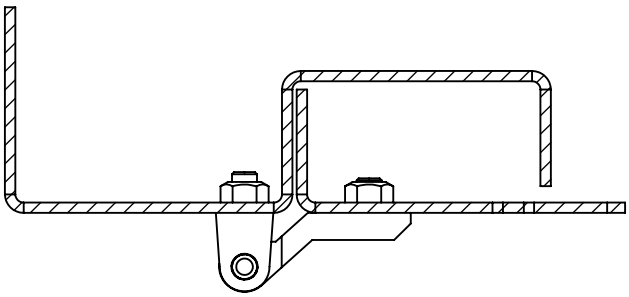

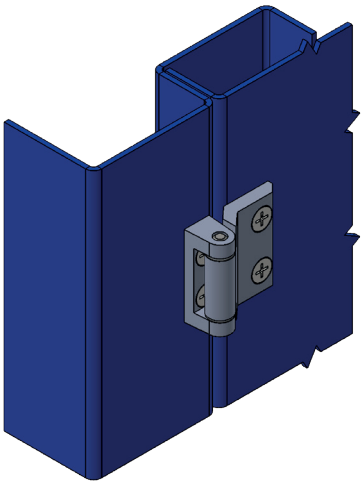

3140 - 180° Hinge

	Zinc die, Black coated	Zinc die, Chrome plated
Item Number	3140 - 210	3140 - 220

RoHS LH/RH